Tianfu Agricultural Exposition

Elegant Design

The Tianfu Agricultural Exposition is part of a major development program in the greater metropolitan area of Chengdu. Located in the Sichuan Basin, where up to 5000m high mountains meet Sichuan's great plains, the wide views of waving rice fields and mountain peaks on the horizon inspired the architect with the concept for the curved timber enclosures.

At over 75,000m2, the new Tianfu Agriculture Exposition is the largest timber project in Asia, and one of the largest timber projects in the world. This series of five vaults (G1-G5) use unique Vierendeel-inspired trusses which are a hybrid of timber chords and steel webbing, achieving clear spans up to 110m and heights up to 44m.

The Vierendeel concept allows the webbing to "disappear", enabling an ephemeral connection between the 3 chords of the triangular trusses, which cantilever in both directions from the foundations to resist the high wind and seismic loads.

The wave of the building ensemble provided challenges for the engineering team to materialize the architectural scheme into a bold project on a very tight schedule. Housing museums and displaying agricultural products from the region, the roofs of these halls are clad with ETFE to protect the exposed timber but are open-ended, encouraging a direct connection with the surrounding farmland.

The result is a unique series of long-span timber structures, created through cooperation of team members on three different continents in 1.5 years throughout the COVID-19 pandemic, delivering indeed the owner's desire to showcase a sustainable solution and provide a world-class attraction through innovative engineering and design.

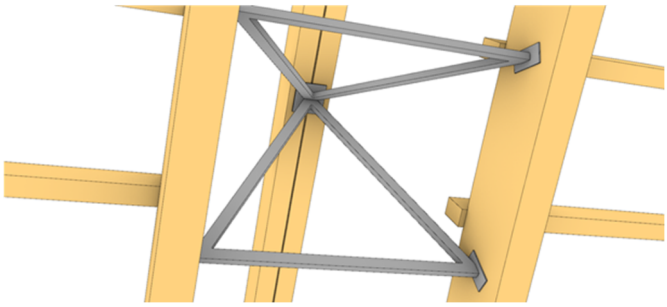

The largest timber vault spans over 110m, highlighted using a 3000m2 LED screen above the main entrance to the convention centre. Each of the 5 vaults is semi-enclosed with a light, cable-supported LED screen at front and a full opening on the back. Some of the structures are filled with inner buildings to support the agricultural expo, and some are open to house flexible spaces and temporary structures. A pre-tensioned translucent ETFE membrane clads the irregular roof surface and protects the timber elements from weather.

The architectural vision for the building ensemble translates into 3500 unique singly curved timber members and a total Glulam volume of over 6500 m3. By integrating a cutting-edge parametric workflow into the design process, the design team achieved the ambitious architectural vision and freed the design from common fabrication and timeline constraints.

The core geometry of each vault is defined by two base lines on the ground to define the axis and span, and the first/last truss height. All vault arch curves (except G1) are catenaries to reduce truss moments and increase structural efficiency. Even though G1 is the largest span and therefore has the highest loads, its geometry was constrained by clearance to the interior buildings and a maximum height.

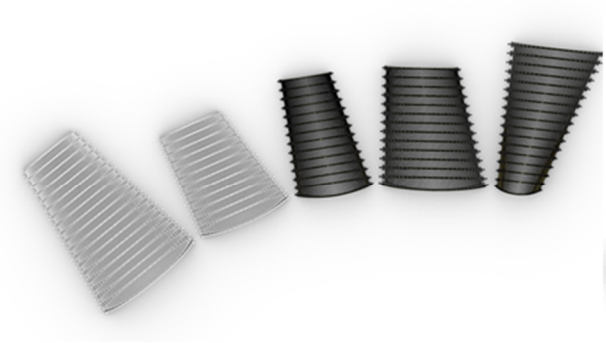

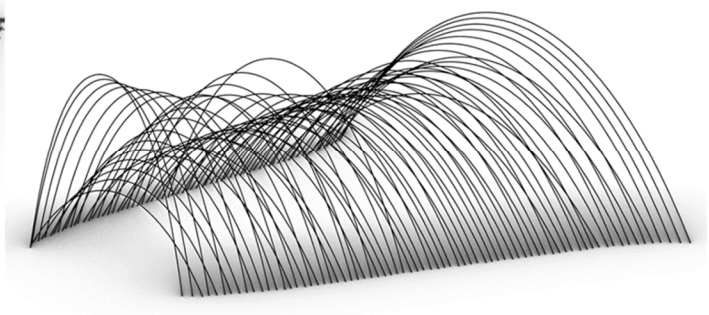

All trusses G1-G5, arranged by span

All vaults have the same structural system, which consists of independent truss arches, laterally tied together by purlins and global cable bracing. Vertical and local orthogonal forces (due to wind) are transferred by the purlins to the bottom chords where they are translated into axial and bending chord forces. The steel base connections transfer the chord forces through steel embed plates into the massive concrete foundations which were designed by the local design institute.

Sustainability

The architect proposed an ambitious plan to build the Tianfu Agricultural Expo with timber, which would use a renewable material to emphasize the local agrarian economy and culture. The local government loved the plan, but did not believe the use of timber was achievable for structures of this scale – there were significant concerns around the high seismic zone (up to 0.3g base shear), use of combustible material, and achieving a > 100m span structure out of timber. The local design institutes did not have the experience to bring such a timber design to fruition, and China lacks both timber engineering codes and local production of Glulam for the project. Despite the challenges, the architect recognized the importance of making a bold sustainability statement in China – which despite its climate crisis is well positioned to take large steps toward more sustainable design when properly guided.

In addition to the significant challenges around codes, the budget implications of importing European Glulam were significant compared to a locally manufactured steel structure. The budget constraints created significant pressure for us as structural engineers to create a highly efficient structure. In our carbon studies, the European spruce and larch Glulam would need to be shipped to China, but would still have significantly lower embodied carbon than steel or concrete produced in China. The timber chords are trussed with steel to create an efficient hybrid structural system. The structural design was optimized computationally to use all materials as sparingly and efficiently as possible. We were able to achieve a material intensity of around 50 kg/m2, which is remarkable considering the combined compression and bending performance required with the cantilevered triangular trusses.

This project is in strong alignment with UN Sustainable Development Goals 2, 13, and 15 – by using sustainably sourced (PEFC) Glulam we were able to significantly reduce the overall carbon impact of the structure compared to a steel structure and create a structure which is itself to be a beacon of sustainability in China, for this nationally important Agriculture Expo.

Socio-economic Consideration

A significant effort was required to educate the local design institutes, government officials, and industry experts to demonstrate that this project could be built from timber. We met with multiple national level expert peer review panels to demonstrate a robust approach to seismic design, and a structure that met the required design life despite the use of natural materials. We also worked closed with the Local Design Institute who had faith in us to bring these complex structures to fruition. Our involvement throughout the design, procurement, and construction significantly increased the skills of these local designers.

Most importantly, this project benefits the end users by being a bold testament to sustainable design that ties in with the local agrarian economy. Visitors can learn about sustainable farming techniques, sample local produce, visit the agricultural museum, and witness long span timber arches that provide shelter over this unique expo. The project benefits the Chinese design and construction industry by significantly advancing the state of the art of timber structures in China, through the 1.5-yr construction period of the largest and perhaps most ambitious timber structure built to date in China.

Structural Excellence & Efficient Solutions

Our unique structural concept for the arches uses a Vierendeel-inspired truss which is a hybrid of double Glulam bottom chords, a single Glulam top chord, and steel webbing. The steel webbing comprises pairs of thin profiled plates forming splayed triangles, minimizing the visual impact of the webbing. By offsetting the structural workpoints of the truss, the splayed triangles do not actually node out to each other – enabling not only reduced visual clutter, but also creating an opportunity to have a prefabrication and splicing logic which significantly reduces the number of components which

need to be attached in the air. The triangular trusses taper from a wide and deep cross section at the foundations to a narrower and shallower cross section near the apex. This enables creating fixity into the foundations, which is critical for both in-plane and out-of-plane seismic performance, dramatically improving both stiffness and buckling performance compared to a pin-based arch.

Using a true Vierendeel truss would have required moment connections from the webs into the chords, a difficult thing to do with timber. Instead, the splayed triangles turned the moments into pure shear into the exposed Glulam top chord, and a push-pull into the bottom chords. This Vierendeel-inspired truss creates axial forces in the truss webbing and is much more structurally efficient than a bending-active Vierendeel system.

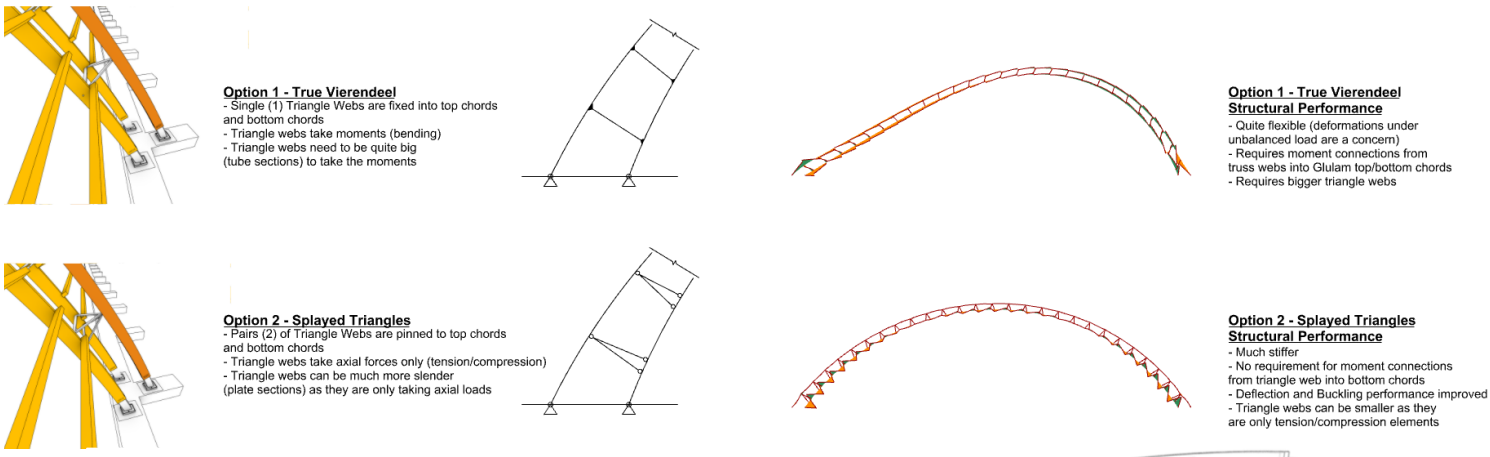

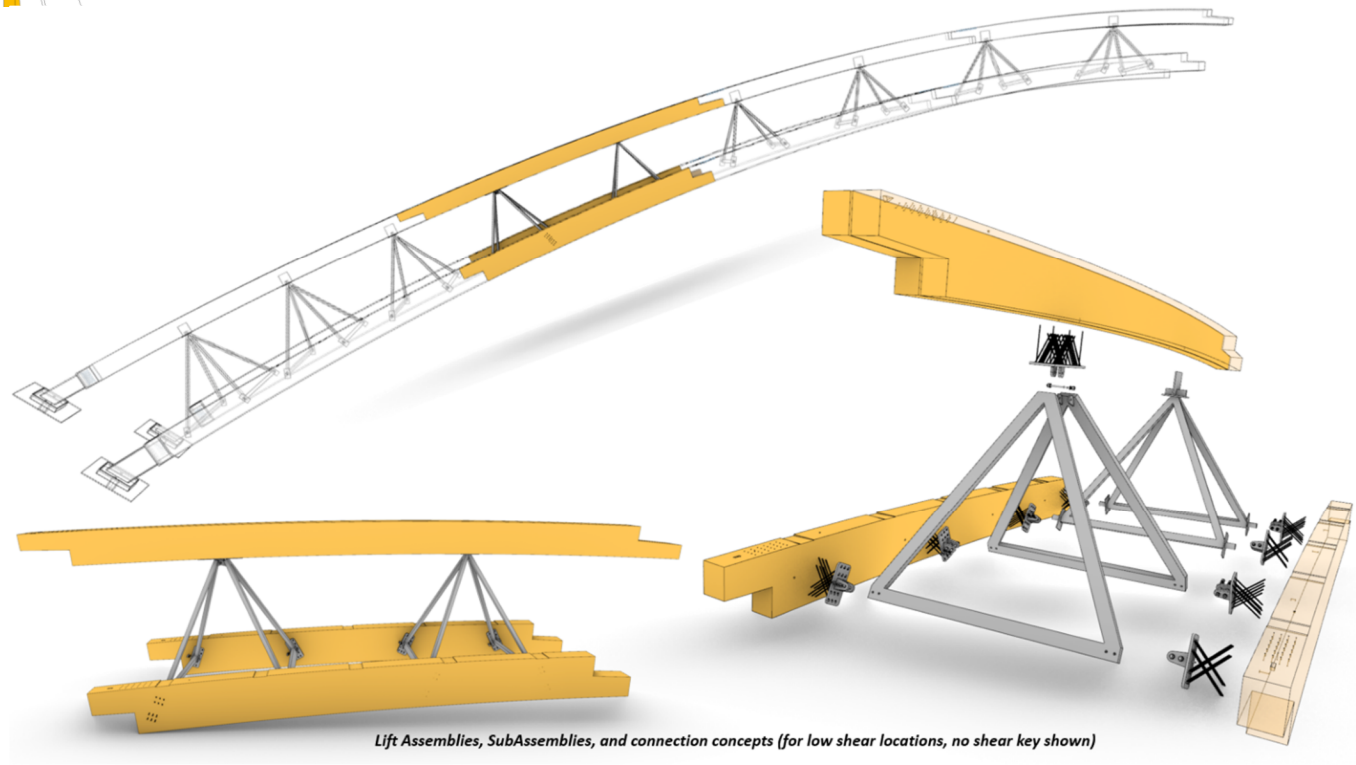

Lift Assemblies, SubAssemblies, and connection concepts (for low shear locations, no shear key shown)

Transferring the large shears into the bottom chords created a significant timber engineering connection challenge – with tension-compression loads of up to 580kN in a splayed triangle pair, typical connections using 45deg screws would have required too many screws aesthetically, and posed questions of the reliability of engaging that many screws at once. Instead, for locations with high loads, we created a unique shear key connection which used a single steel embed into the side of the Glulam bottom chords, with reinforcing screws preventing the dominant splitting behaviour. No timber engineering code worldwide contained formulations to predict the capacity of a shear key such as this into Glulam – as it is an orthotropic material, splitting controls the failure. We conducted full-scale structural testing on some of the shear key concepts at Tongji University in China, parametrically investigating various levels of reinforcing on the splitting behaviour of the Glulam and developing formulas for predicting the allowable design capacity for this unique connection.

Full-scale structural testing at Tongji University – an example test series of one shear key option

Brittle failure mode – insufficient perp to grain reinforcing

Ductile failure mode – increased perp to grain reinforcing

The structural concept for these trusses enabled an assembly-line approach to prefabrication, and was key to the construction team being able to meet the demanding project schedule. As all Glulam was shipped from Europe to China via rail, containerization limited individual Glulam piece lengths; this enforced a certain splicing rhythm and influenced the density and pattern of the splayed triangle trussing.

Once the material arrived on site, the sub-assemblies were prefabricated in temporary fabrication facilities. These ~11.5m long assemblies consisted of un-spliced glulam chords and associated steel webbing. Between two and four sub-assemblies were connected into so-called lift-assemblies near the final arch location, and formed the up to 35m and 25t heavy components which were craned into place. Each arch consists of up to five separate lift-assemblies.

Each of the 5 vaults is tapered, with the geometry changing throughout the length of the vaults. Consequently, one bottom chord is always slightly lower than its neighbour within the same truss. This design decision affected the whole fabrication process by making every arch, web and therefore truss connection unique. No single piece of Glulam or steel is repeated within the entire project.

Creative Innovation

To enable the batch-size-one approach to design and fabrication, the data flow for the entire project was driven by custom C# object model and classes, defining all structural members in 3D space including steel details, notches, screw predrills, and machining information into the timber and steel. A graphical output in Rhino was used to check fabrication data and geometry constraints. Meta data using key-value pairs were automatically assigned to each piece, containing BIM data such as fabrication-, shipping- and construction prefabrication and assembly information. This information in conjunction with the 3D geometry was used to create automated fabrication, shipping, assembly- and erection drawings, as well as fully automated CNC machine files (BTLx/BVX). These machine files directly out of the design model were used by several Glulam manufacturers in Europe to produce the Glulam, with no further manual modification required in CAM software, enabling a direct-to-manufacturing digital fabrication process.

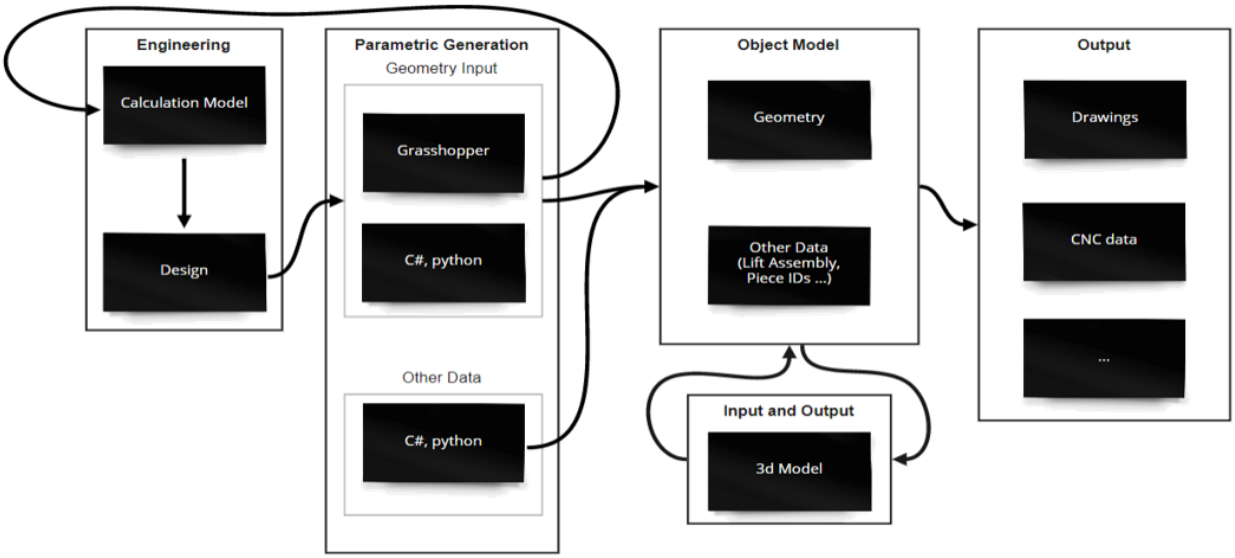

Computational engineering, modelling, and fabrication data project workflow

Vertical integration made DfMA a true focus throughout the design process, embedding buildability into the structural concept. The construction of this project directly benefitted the local work force by upskilling over 300 local carpenters. Construction techniques were developed with local labour abilities in mind. We created IKEA-style "instruction sets" including 2D diagrams, 3D models, and animations of all assembly steps, creating fool-proof concepts for ensuring the accurate assembly of over 60,000 different components into more than 6500 timber and steel pre-fabricated components.

As the structure was designed and built entirely during the COVID lock-down, a significant additional challenge was that our engineers were unable to visit China throughout the duration of the project. This created a remarkable focus on virtual QC/QA and structural inspection techniques, resulting in many technological innovations in this space, including use of "living" SaaS platforms: these platforms enhanced the digital drawings with actual photos and surveyed dimensions of each manufactured piece, allowing our engineers to track the status, quality, and accuracy of each pre-assembled piece throughout its construction life-cycle. To date, no engineer from our team has yet visited the construction site, and yet the level of erection precision in the complete structure gives great confidence in the future of virtually supervised construction.

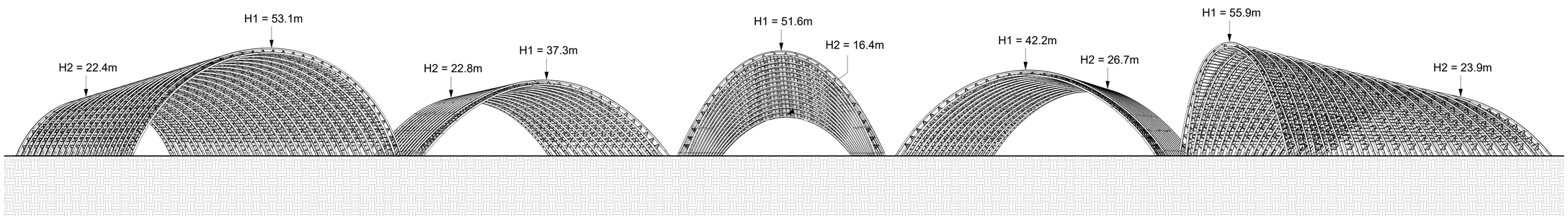
H2 = 22.4m
H1 = 53.1m
H2 = 22.8m
H1 = 37.3m
H1 = 51.6m
H2 = 16.4m
H1 = 42.2m
H2 = 26.7m
H1 = 55.9m
H2 = 23.9m

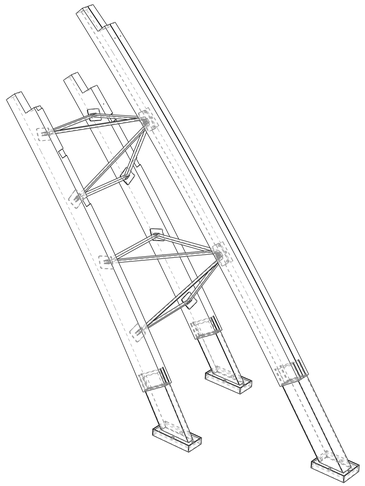

1 G4 SUB-ASSEMBLY 1 VIEW

Scale: NTS

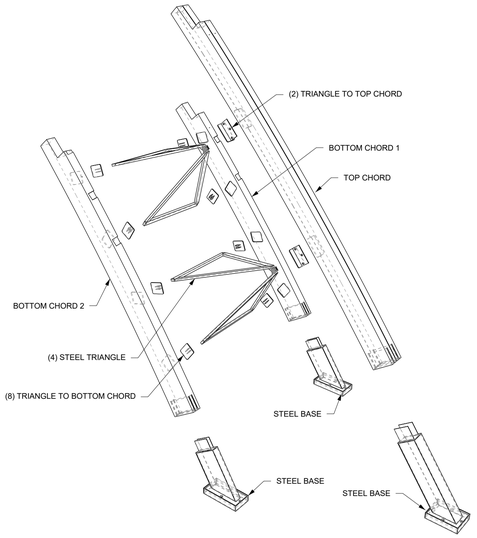

2 G4 SUBASSEMBLY 1 VIEW

Scale: NTS

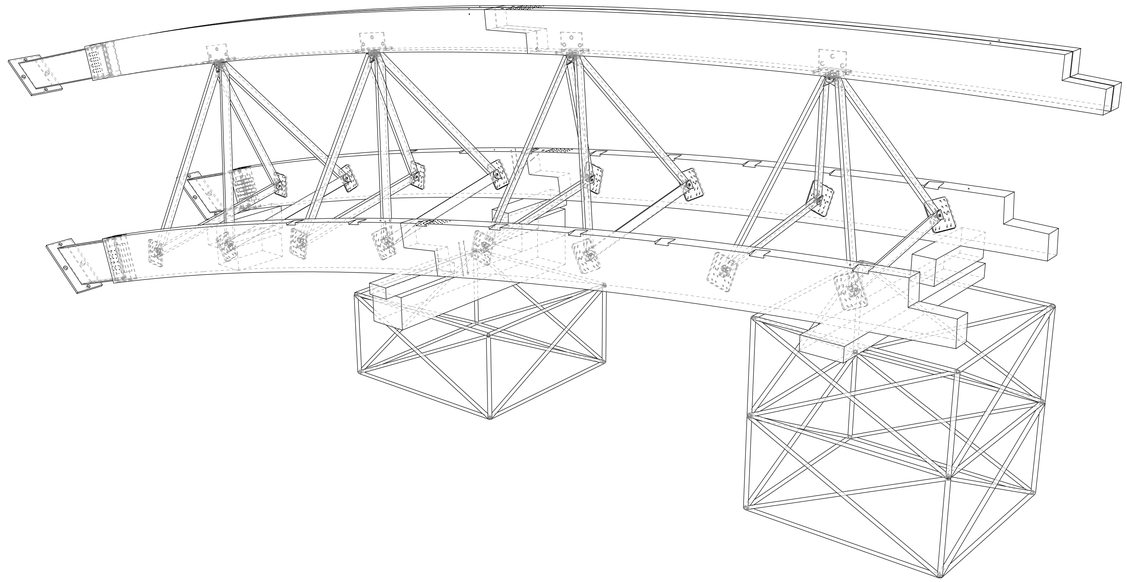

3 ASSEMBLY PROCESS VIEW

Scale: NTS

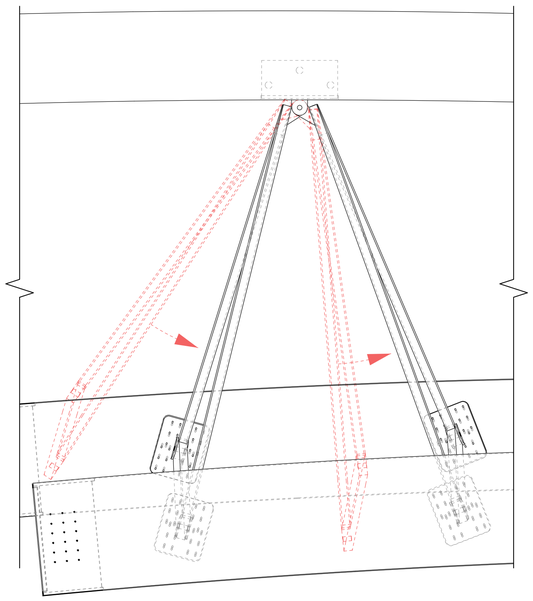

4 STEEL TRIANGLE ASSEMBLY

Scale: NTS

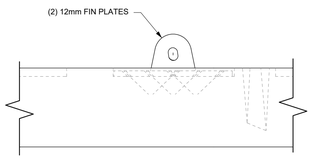

5 TRIANGLE TO BOTTOM CHORD (SIDE)

Scale: 1:10

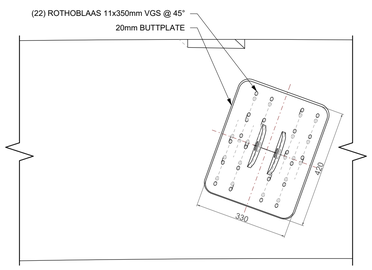

6 TRIANGLE TO BOTTOM CHORD (TOP)

Scale: 1:10

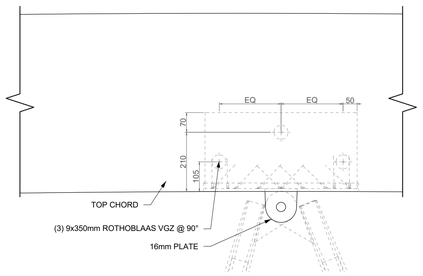

7 TRIANGLE TO TOP CHORD (SIDE)

Scale: 1:10

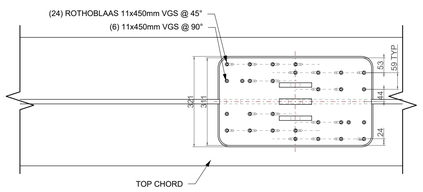

8 TRIANGLE TO TOP CHORD (TOP)

Scale: 1:10

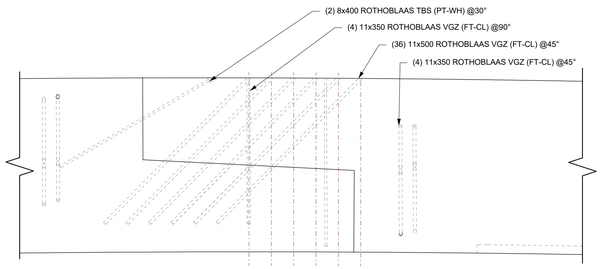

9 TOP CHORD SPLICE CONNECTION (SIDE)

Scale: 1:10

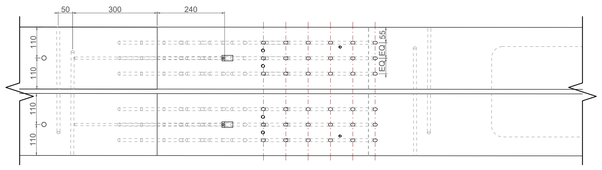

10 TOP CHORD SPLICE CONNECTION (TOP)

Scale: 1:10

REV.	DESCRIPTION	DATE

ISSUED

StructureCraft
1929 Foy Street
Abbotsford, BC Canada V4G 1G9
T 604.940.8889
F 604.940.8857

ARCHITECT
CuiKai Studio

CLIENT
Sichuan TianFu Agriculture Expo Investment

PROJECT
Tianfu Agricultural Expo

TITLE
####

DRAWN: SC
CHECKED: LE
DATE: 05/07/2022
JOB No. S372
REVISION 0

DWG. No.
####

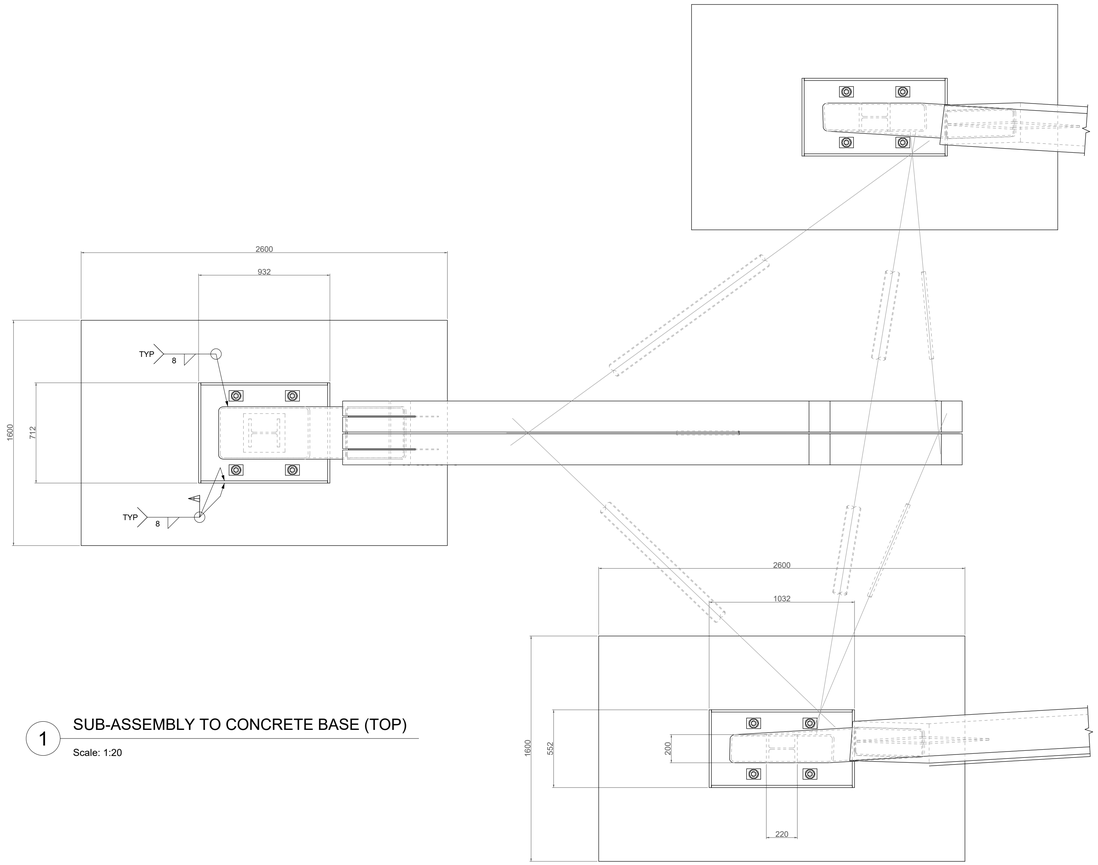

1 SUB-ASSEMBLY TO CONCRETE BASE (TOP)

Scale: 1:20

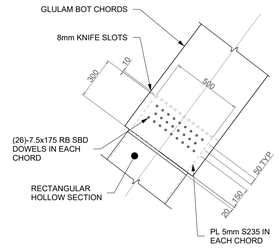

3 STEEL HSS TO BOTTOM CHORD (SIDE)

Scale: 1:20

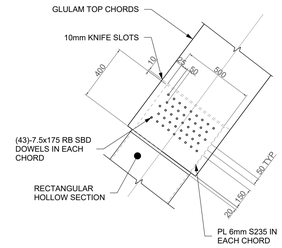

4 STEEL HSS TO TOP CHORD (SIDE)

Scale: 1:20

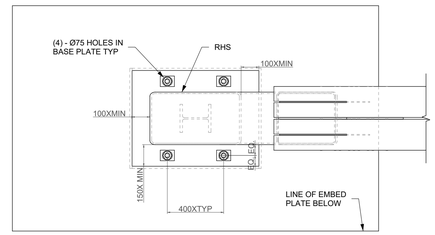

6 STEEL HSS TO CONCRETE BASE (TOP)

Scale: 1:20

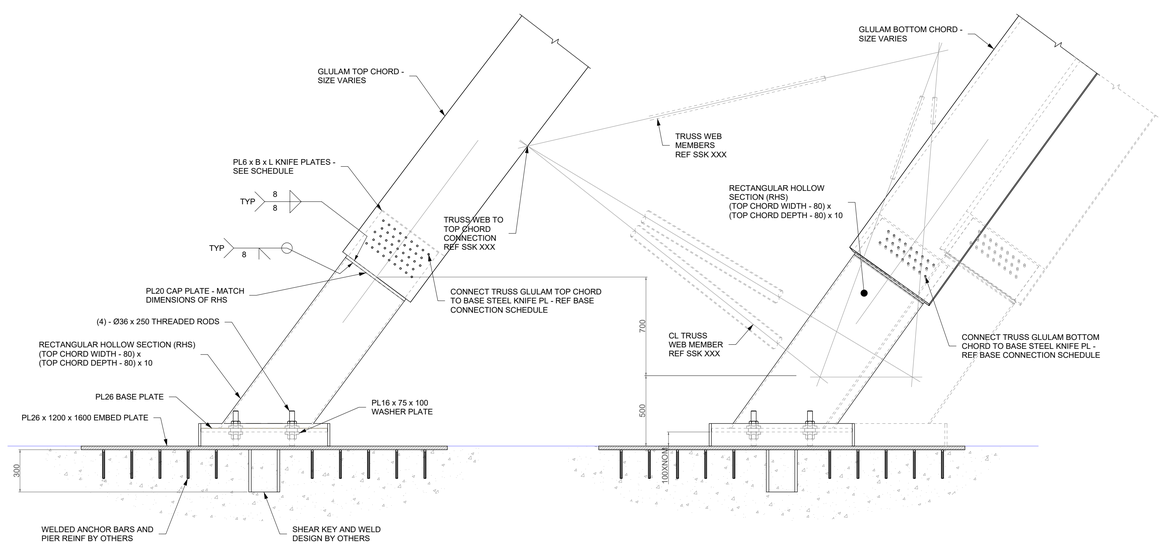

2 SUB-ASSEMBLY TO CONCRETE BASE (SIDE)

Scale: 1:20

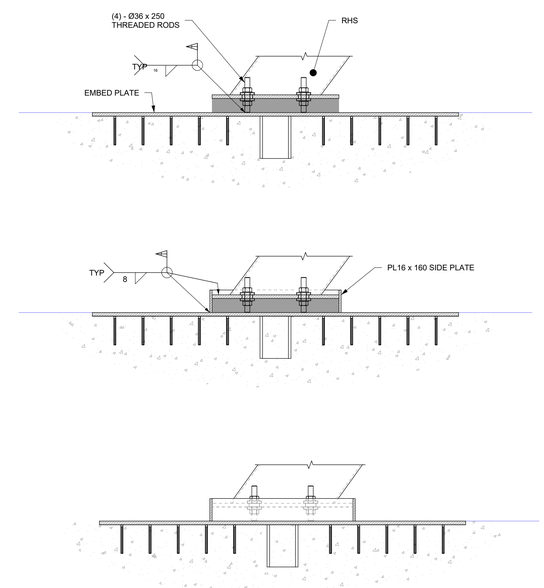

6 STEEL HSS TO CONCRETE BASE (TOP)

Scale: 1:20

REV.	DESCRIPTION	DATE

ISSUED

StructureCraft

1929 Foy Street
Abbotsford, BC Canada V4G 1G9
T 604.940.8889
F 604.940.8857

ARCHITECT

CuiKai Studio

CLIENT

Sichuan TianFu Agriculture Expo Investment

PROJECT

Tianfu Agricultural Expo

TITLE

####

DRAWN: SC

CHECKED: LE

DATE: 05/07/2022

JOB No. S372

REVISION 0

DWG. No.

#####

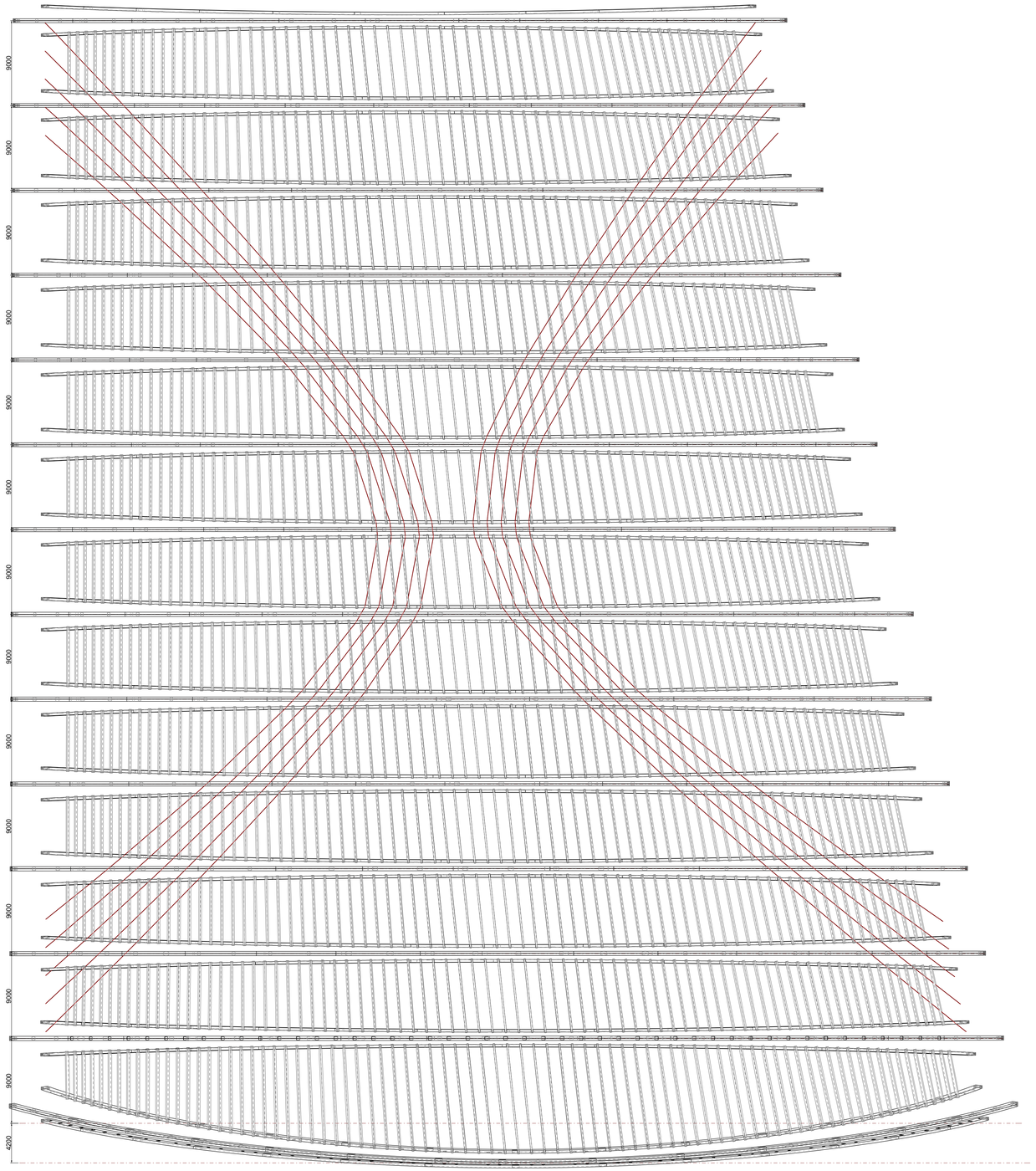

1 G4 CABLE LAYOUT

Scale: 1:250

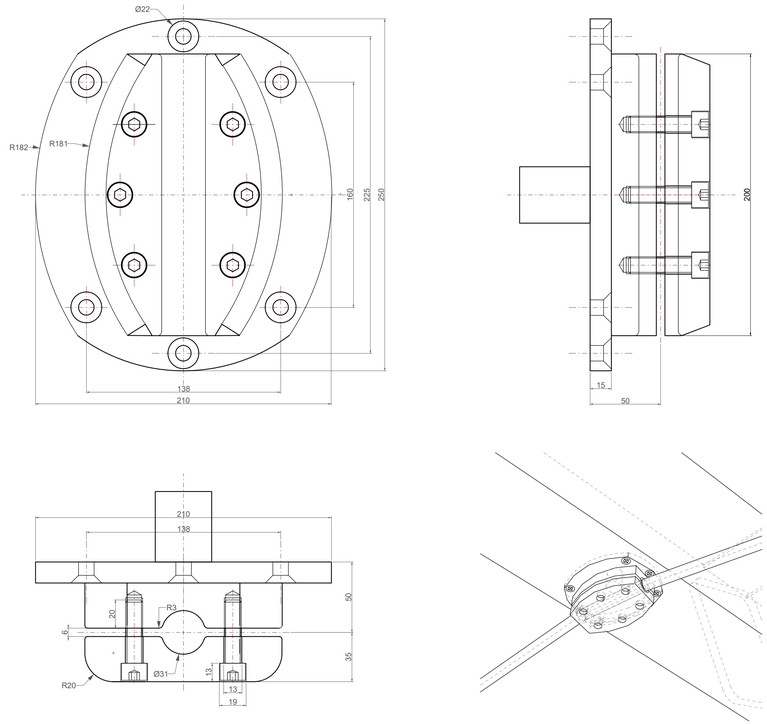

2 TENSION CABLE CASTING

Scale: 1:2

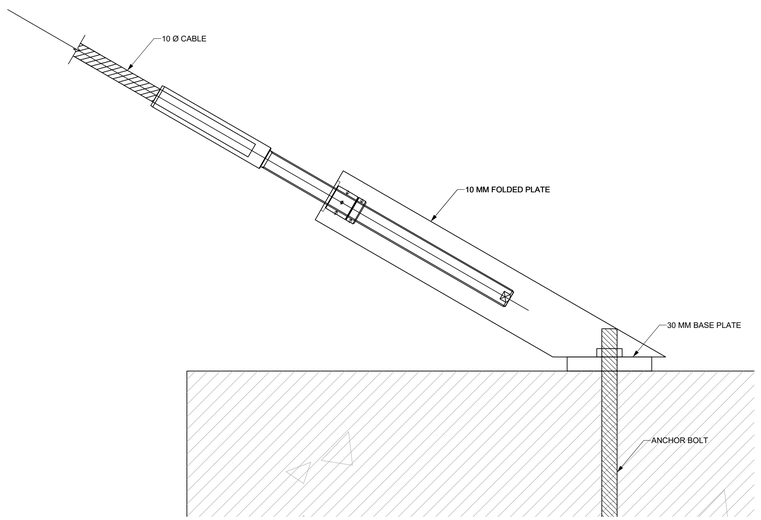

3 TENSION CABLE BASE

Scale: 1:2

REV.	DESCRIPTION	DATE

ISSUED

StructureCraft
1929 Foy Street
Abbotsford, BC Canada V4G 1G9
T 604.940.8889
F 604.940.8857

Do not scale off the drawings or CAD files; always read written dimensions.

ARCHITECT
CuiKai Studio

CLIENT
Sichuan TianFu Agriculture Expo Investment

PROJECT
Tianfu Agricultural Expo

TITLE
####

DRAWN: SC	JOB No.	S372
CHECKED: LE	REVISION	0
DATE: 05/07/2022		

DWG. No.
#####