Fast + Epp

ASSOCIATION OF CONSULTING ENGINEERING COMPANIES | CANADA
ASSOCIATION DES FIRMES D'INGÉNIEURS-CONSEILS | CANADA

CANADIAN CONSULTING engineer

TSINGTAO PEARL VISITOR CENTRE

Qingdao, China

Fast + Epp

201 - 1672 West 1st Avenue
Vancouver, BC V6J 1G1
T: 604.731.7412
F: 604.731.7620
mail@fastepp.com
ATTN : Rebekah Funk

TSINGTAO PEARL VISITOR CENTRE
Qingdao, China

ASSOCIATION OF CONSULTING ENGINEERING COMPANIES: Awards 2013 Competition

Year Completed: 2012

Category A: Buildings

Entering Firm: Fast + Epp — Structural Engineering

Project Leaders: Gerald Epp, Dustin Willms

Project Owner: China Vanke Co., Ltd.
(contact: Wang Yao, Assistant General Manager)

Project Client / Contractors: StructureCraft Builders Inc.
(contact: Michael Marshall, General Manager)
& Bohlin Cywinski Jackson Architects

Architect: Bohlin Cywinski Jackson Architects
(contact: Robert Miller, Principle)

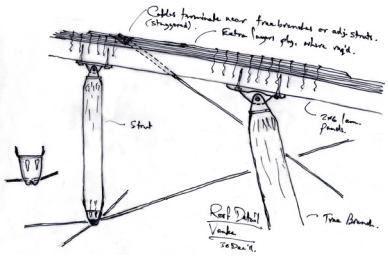

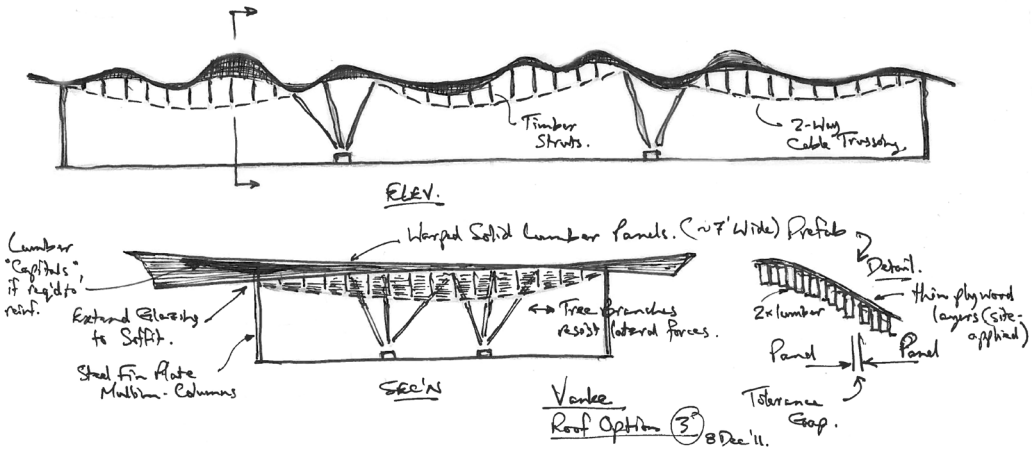

TSINGTAO PEARL VISITOR CENTRE – Fast + Epp

75-Word Summary:

The 28,000 sq. ft. Tsingtao Pearl Visitor Centre highlights the beauty of its surroundings, serving as a welcome portal to China Vanke Co. Ltd.'s growing community development in Qingdao. Wholly designed and constructed in eight months, the project encompasses the role of a "game-changer" for the use of staple wood products in China. Structural Engineers at Fast + Epp teamed with design-builders at StructureCraft and Bohlin Cywinski Jackson Architects to realize this innovative building, which required extensive prefabrication and planning.

Project Highlights:

Innovation

Over the past twenty years China has shown increasing interest in utilizing the skills of Western architects. As the country imports ideas and technology, its insistence that construction be carried out by Chinese companies has often resulted in obstacles to progress – felt by Western architects left powerless to ensure their designs are successfully communicated and implemented.

This project was an experiment in how Western designers could overcome these challenges to see their innovative designs executed in detail – with a sophisticated design and a building material unfamiliar to locals. The project required close interaction with Chinese design institutes to pass design and regulatory requirements in China, including those for fire, which was of great concern.

The key was finding a delivery method that could achieve this. Fast + Epp joined forces with related timber builder StructureCraft, with cooperation from the Chinese client and regulators, to devise a method to parcel construction so that complex components and connections could be designed and fabricated in Canada, while mass wood elements could be assembled by the foreign work force. This was developed using techniques which are cutting edge world-wide, yet at the same time simple enough to ensure success.

Inspired by ideas of creating a warped solid wood plate, the team developed 39 novel solid-laminated wood roof panels to be fabricated on site using ordinary lumber. Concurrently, 93 glue-laminated wood columns of varying length were individually milled and fitted with custom universal connectors, and shipped to China. Canadians supervised panel fabrication on site – including the setup and furnishing of an on-site fabrication shop – to aid in the manufacture and erection of the 39 unique panels. Each panel size was designed and positioned so two tower cranes could easily lift them straight from a lay down area in front of the temporary on-site shop. This extensive prefabrication and planning secured success, as well as compliance with the project's schedule, which saw the building wholly designed and constructed in eight months.

The Tsingtao Pearl Visitor Centre project is without precedent world-wide. The design has already been recognized nationally in China, although it has only recently been completed. Already, it has sparked further interest in exploring what is possible with architectural wood structures in this rapidly developing and highly populated nation. The Engineer – because of the demands of a complex, exposed architectural structure – is thus much more heavily relied upon. This type of project clearly expands the role of the Engineer, and his recognition, and encourages further exploits as to what can be done in future. The approach allows wood to be used in highly creative yet simple ways, both in China and elsewhere in the world.

Complexity

The team developed a complex design idea that could be simply constructed – a warping wood plate consisting of straight pieces of ordinary Canadian lumber and plywood. A solid laminated wood roof was site fabricated in six-foot-wide panels and supported by 93 milled glulam columns (which had already been prefabricated at StructureCraft's shop in Canada), and a two-way cable truss system. Lumber and plywood was prefabricated on site into panels two metres wide by up to 22 metres long, that were then flown onto shoring pre-calculated for height.

The roof needed to have continuous strands of lumber for up to 40 metres so a scheme was developed to create visually "random" splicing, and panels were "stitched" together by loose pieces of lumber in place. The team did preliminary studies to determine column cluster frequency and location, given the difficulty in predicting performance of the free-form 3D roof. In addition, all of the columns are highly sloped, so slopes of all 93 columns (up to 10m long) were established by iteration to achieve a net balance of forces in the roof in both lateral directions and in torsion, with the roof diaphragm used to resolve the resulting internal forces. (i.e. the structure was designed to "balance" so that the minimal shear walls were only needed to resist wind and seismic forces).

To achieve the free-flowing form, engineers used advanced Finite Element software to model the orthotropic nature of the curved wood plate and cable structure, including sensitivity analysis to assess the effects of workmanship quality in this foreign environment. An intense design effort was required in creating a completely-custom universal connector that worked for all 93 column orientations, at both base and roof.

Social & Economic Benefits

While there were many issues that stemmed from cultural differences & China's Political System, the project was a very rich experience, and very successful and rewarding for those involved.

A team was sent to China to instruct and oversee safety, fabrication and erection. Project Management was vital to the quality control aspects, structural integrity and overall aesthetic of the Tsingtao Pearl – particularly as local construction crews often valued adherence to schedule above all else.

One of the key social and economic benefits was expertise passed from StructureCraft's Project Management team to Chinese crews, particularly with regards to safety. StructureCraft conducted a full day of safety training for local Chinese construction crews in response to questionable safety practices on site. This training was well-received by Chinese crews and resulted in implementation and adherence to many of the suggestions, and the potential for increased attention to workers' safety in the Chinese building industry.

The unique prefabrication method allowed the project to meet the overarching budget. Fast + Epp, along with the rest of the project team, developed a unique fast-track design-build approach for this time-challenged yet complex overseas project – to manage design, fabrication, and construction within an eight-month time period, under an unchanged fixed price of about $7 million. The project proves complex and high-quality designs can be economical as well.

Environmental Impact

The project utilizes the widespread use of timber, a rapidly-renewably resource with low-embodied energy and carbon-sequestering capabilities. It features a green roof, populated with grasses native to the region. Extensive glazing allows for natural daylighting and an overall reduction in energy consumption.

The viability of wood as a building solution was initially discounted in preliminary talks with the developer in China due to concerns regarding structural strength, durability, combustibility and cost. However Fast + Epp, together with StructureCraft and the architects, was able to inform the client of the inherent advantages of using wood to sustainably achieve the Tsingtao Pearl's daring and complex building form.

This project encourages wood use in a country that has all but forsaken the sustainable material in architecture of late. Part of the intention of the project was to introduce Chinese builders, architects and the public to the incredible potential of timber as a green building material for more than simple wood-frame residential construction.

Meeting the Client's Needs

The client's objective was to explore the use of wood in a significant way on a high profile project, and create an economical yet aesthetically-striking visitor centre to act as an inviting gate to the Tsingtao Pearl development in Qingdao. They also needed to complete the project under a strictly-enforced timeline to ensure its readiness for guests by the targeted opening of the Tsingtao Pearl development. In North America, such a process would typically take two years, yet the design-build method developed by the project team ensured the timeline was met. Structural Engineers needed to be creative and fully integrated with the builder to ensure success of this highly unique, geometrically complex project.

The design team developed an outside-the-box approach to Integrated Project Delivery. They established a fixed-price contract at the conceptual stage of the project, launching immediately into intense multi-faceted planning and project management.

They also found creative ways to mitigate the delays created by China's rigid import regulations and often slow-moving bureaucracy involved with imports and exports. Though a number of products critical for the next stages of construction were delayed by this "red tape," the team found solutions. Long lead items were ordered before the design was completed (such as glulam columns and lumber), while 3D modeling of the structure was done concurrently with the development of architectural drawings, eliminating need for formal working drawings. Just-in-time delivery of parts (wood columns, struts, cables, connectors, fasteners, and glue) met both shipping time and site fabrication requirements.

Figure 1: The team developed a design idea that could be simply constructed on site in China – a warping wood plate that consisted of straight pieces of ordinary Canadian lumber and plywood, fabricated into panels in a temporary shop on site with the aid detailed drawings. Photo Credit: StructureCraft Builders

Figure 2: Crews erect the roof structure on site. Photo Credit: StructureCraft Builders

Figure 3: As the roof needed to have continuous strands of lumber for up to 40m, a scheme was developed to create visually "random" splicing, and panels were "stitched" together by loose pieces of lumber in place. Photo Credit: StructureCraft Builders

Figure 4: Construction crews rapidly erect the columns and roof panels on site, completing the building in adherence with the project's tight schedule. The project was largely designed and constructed in eight months. Photo Credit: StructureCraft Builders

Figure 5: With 39 unique wood roof panels and 93 prefabricated columns, the Tsingtao Pearl Visitors Centre provides a warm user experience and welcome portal for the growing development in Qingdao, China. Photo Credit: Forestry Innovation Investment & Canada Wood

Figure 6: Aerial view of the undulating 28,000 sq. ft. structure, featuring a green roof with grasses local to the area. Photo Credit: Forestry Innovation Investment & Canada Wood

Figure 7: Intense design effort created a completely custom universal connector that would work for all 93 column orientations, at both the base and roof. Photo Credit: StructureCraft Builders

Figure 8: The Tsingtao Pearl Visitor Centre highlights the beauty of the site, serving as a welcome portal to this growing community development while using ordinary Canadian wood in a far-from-ordinary way. Photo Credit: Forestry Innovation Investment & Canada Wood

Bohlin Cywinski Jackson

Peter Q. Bohlin, FAIA
Bernard J. Cywinski, FAIA (1940-2011)
Jon C. Jackson, FAIA
Frank W. Grauman, FAIA, LEED AP
William D. Loose, AIA
Cornelius J. Reid, III AIA
Karl A. Backus, AIA
Gregory R. Mottola, AIA
C. Roxanne Sherbeck, AIA
Robert E. Miller, FAIA, LEED AP
Raymond S. Calabro, AIA

January 16, 2013

Association of Consulting Engineering Companies

Subject: **2013 BC Awards Competition**

I am writing in support of Fast + Epp's efforts in collaborating with our firm in the design and completion of the Pearl Hill Visitor's Center in Qingdao, China. It is my understanding that Fast + Epp is submitting the project to your organization's 2013 BC Awards Competition for Engineering. We have granted permission and encouraged Fast + Epp to make this submission in recognition of their significant contributions to the project.

As I am sure will be outlined in the submission materials the project had significant challenges including a condensed schedule that spanned a mere 15 months between initial contact in November of 2011 and occupancy in February of 2013, a project site location across an ocean, and cultural and language barriers of an overseas client group.

The Pearl Hill Visitors Center is a very innovative and unique project that could not have been realized without the intense collaboration between Bohlin Cywinski Jackson and Fast + Epp. The clients desire to utilize wood construction in a country where wood construction has been largely abandoned was a challenge. Together we explored many innovative systems to incorporate wood as the primary structure. The constraints of time and distance led us the most appropriate solution of 2x materials forming a solid wood raft for the roof with the successful expression of innovation in the project tied inextricably to its engineering. Fast + Epp in collaboration with its Structurecraft division helped bridge the project constraints to realize the architectural concept and the clients financial and schedule constraints. Their involvement from conception through completion served a critical role in design, engineering, education, training, quality control, problem solving, and post occupancy evaluation with the client group.

Our client and the design team are very satisfied with the structure and how it fits the landscape. The client very recently and proudly submitted the building for a China Design Award program and received an excellence in design award. We are looking forward to many more successful design award submissions and to continuing our successful collaborations with Fast + Epp on future opportunities requiring similar excellence in engineering and design. The building is an icon of the increasing demand and successful collaboration beyond our shores for ingenuity and advancement of design and engineering as an integral part of corporate branding.

Sincerely,

Robert E. Miller, FAIA, LEED AP

Principal

Cc: Gerald Epp, Fast + Epp

Architecture Planning Interior Design
Wilkes-Barre/Pittsburgh/Philadelphia/Seattle/San Francisco

1932 First Avenue, Suite 916
Seattle, Washington 98101-1052
206-256-0862/Fax: 206-256-0864

Figure 9: Letter of reference from project Architect and Client, Bohlin Cywinski Jackson, attesting to the quality of Fast + Epp's work.

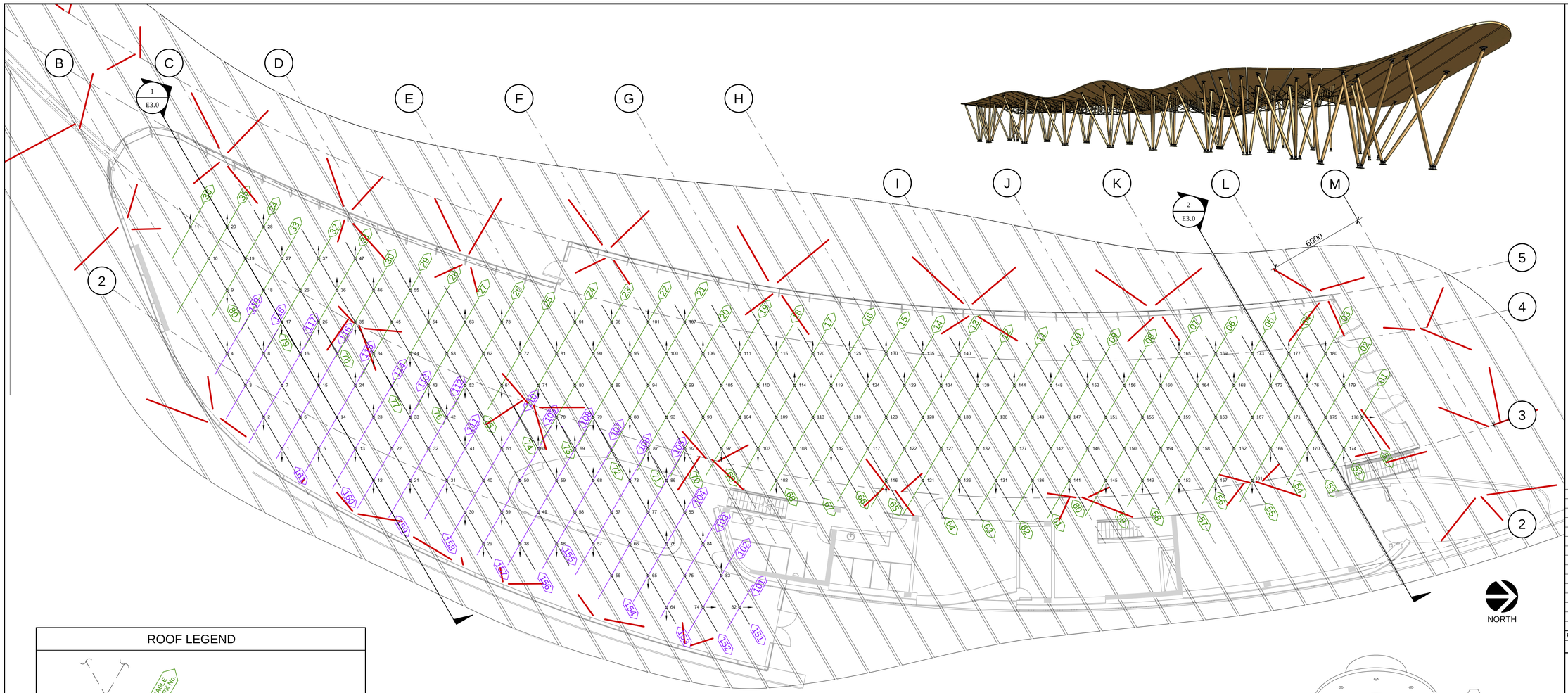

1 - ROOF PLAN - STRUTS/CABLE LAYOUT
1:125

ROOF LEGEND

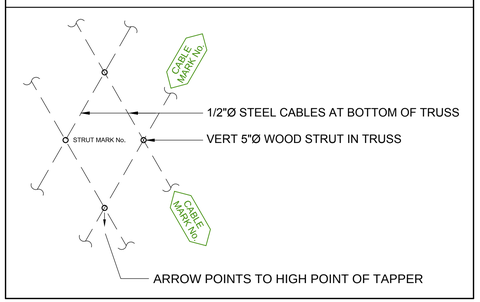

2

CABLE NOTES:

1) INSTALL CABLES PARALLEL TO PANEL AXIS (UPPER LAYER) PRIOR TO OTHER DIRECTION

2) ORIENTATION OF CASTING ON THE STRUTS IS IMPORTANT SEE DETAIL 3 AND 4

3) TENSION EACH CABLE SIMULTANEOUSLY FROM EACH END UNTIL THE SAG IS REMOVED (APPROX 3KN)

4) ENSURE CABLES ARE INSTALLED IN SEQUENTIAL ORDER, EACH ADJACENT CABLE AFTER THE NEXT

5) CABLE TENSIONING WILL REQUIRE SEVERAL ITERATIONS TO ENSURE TENSION REMAINS IN EACH CABLE

6) AFTER CABLES ARE INSTALLED IN SECONDARY LAYER CHECK TENSION IN UPPER LAYER TO ENSURE SAG HAS NOT DEVELOPED

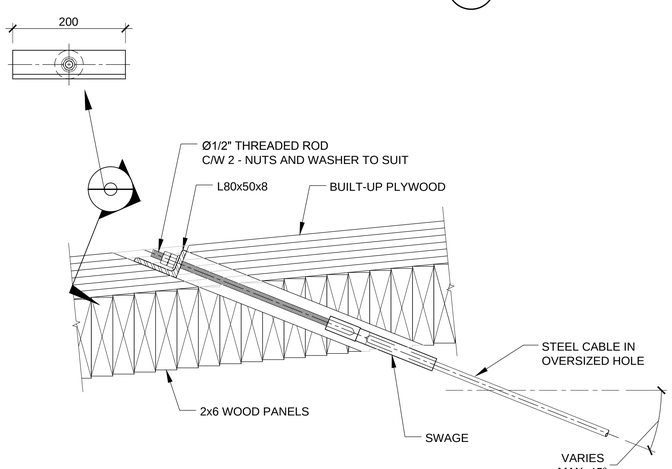

2 - CABLE CONNECTION
1:5

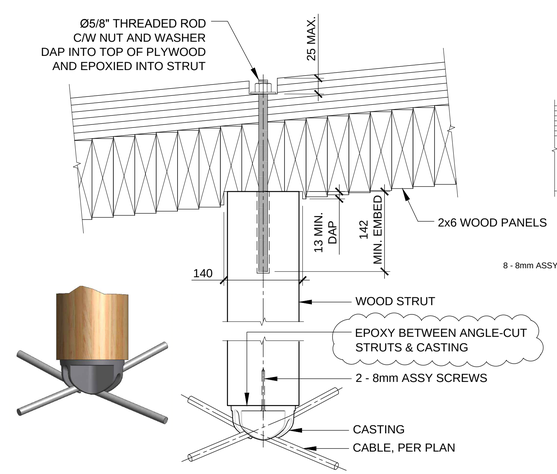

3 - STRUT CONNECTIONS
1:5

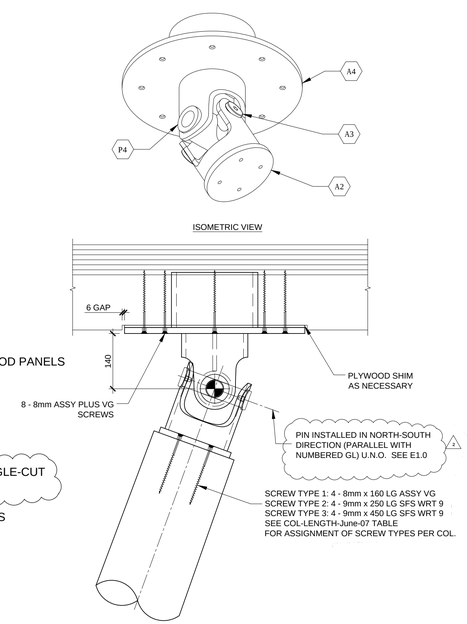

A - EXTERIOR COLUMN TOP CONN.
1:5

REV.	DESCRIPTION	DATE
2	RE-ISSUED FOR CONSTRUCTION	2012-07-10
1	ISSUED FOR CONSTRUCTION	2012-06-11
B	ISSUED FOR COORDINATION	2012-06-07
	ISSUED FOR COORDINATION	2012-05-11
A	ISSUED FOR APPROVAL	2012-05-07

ISSUED

StructureCraft
8279 River Way
Delta, BC
Canada V4G 1G9
T 604.940.8889
mail@structurecraft.com

Fast+Epp
structural engineers
Suite 201
1672 West 1st Ave
Vancouver BC
Canada V6J 1G1
T 604 731 7412
F 604 731 7620
mail@fastepp.com

ARCHITECT
BOHLIN CYWINSKI JACKSON

CLIENT
VANKE Co. Ltd.

PROJECT
TSINGTAO PEARL
VISITOR CENTER
D-B ROOF STRUCTURE

TITLE
ROOF PLAN
STRUT/CABLE LAYOUT
AND DETAILS

DRAWN: SAD
CHECKED:
DATE: MAY 2012
JOB No. S221
REVISION 2

DWG. No.
E1.2